PRODUCT INFORMATION PACKET

Model No: 056S17D2064
Catalog No: B100
1/2,1800,DP,56,1/60/115/230
Fan and Blower

Regal and Marathon are trademarks of Regal Beloit Corporation or one of its affiliated companies.
©2018 Regal Beloit Corporation, All Rights Reserved. MC017097E

Nameplate Specifications

Output HP	**0.50 Hp**	Output KW	**0.37 kW**
Frequency	**60 Hz**	Voltage	**115/230 V**
Current	**7.2/3.6 A**	Speed	**1725 rpm**
Service Factor	**1.25**	Phase	**1**
Efficiency	**66 %**	Duty	**Continous**
Insulation Class	**B**	Design Code	**NO DESIGN CODE**
KVA Code	**L**	Frame	**56**
Enclosure	**Drip Proof**	Overload Protector	**Automatic**
Ambient Temperature	**40 °C**	Drive End Bearing Size	**6203**
Opp Drive End Bearing Size	**6203**	UL	**Recognized**
CSA	**Y**	CE	**Y**
IP Code	**22**		

Technical Specifications

Electrical Type	**Split Phase**	Starting Method	**Across The Line**
Poles	**4**	Rotation	**Selective Counterclockwise**
Mounting	**Resilient Base**	Motor Orientation	**Horizontal**
Drive End Bearing	**Ball**	Opp Drive End Bearing	**Ball**
Frame Material	**Rolled Steel**	Shaft Type	**NEMA 56**
Overall Length	**10.47 in**	Frame Length	**6.50 in**
Shaft Diameter	**0.625 in**	Shaft Extension	**1.97 in**
Assembly/Box Mounting	**F1 Only**		
Outline Drawing	**A-SS403611-650**	Connection Diagram	**A-EE7196**

This is an uncontrolled document once printed or downloaded and is subject to change without notice. Date Created: 06/29/2018

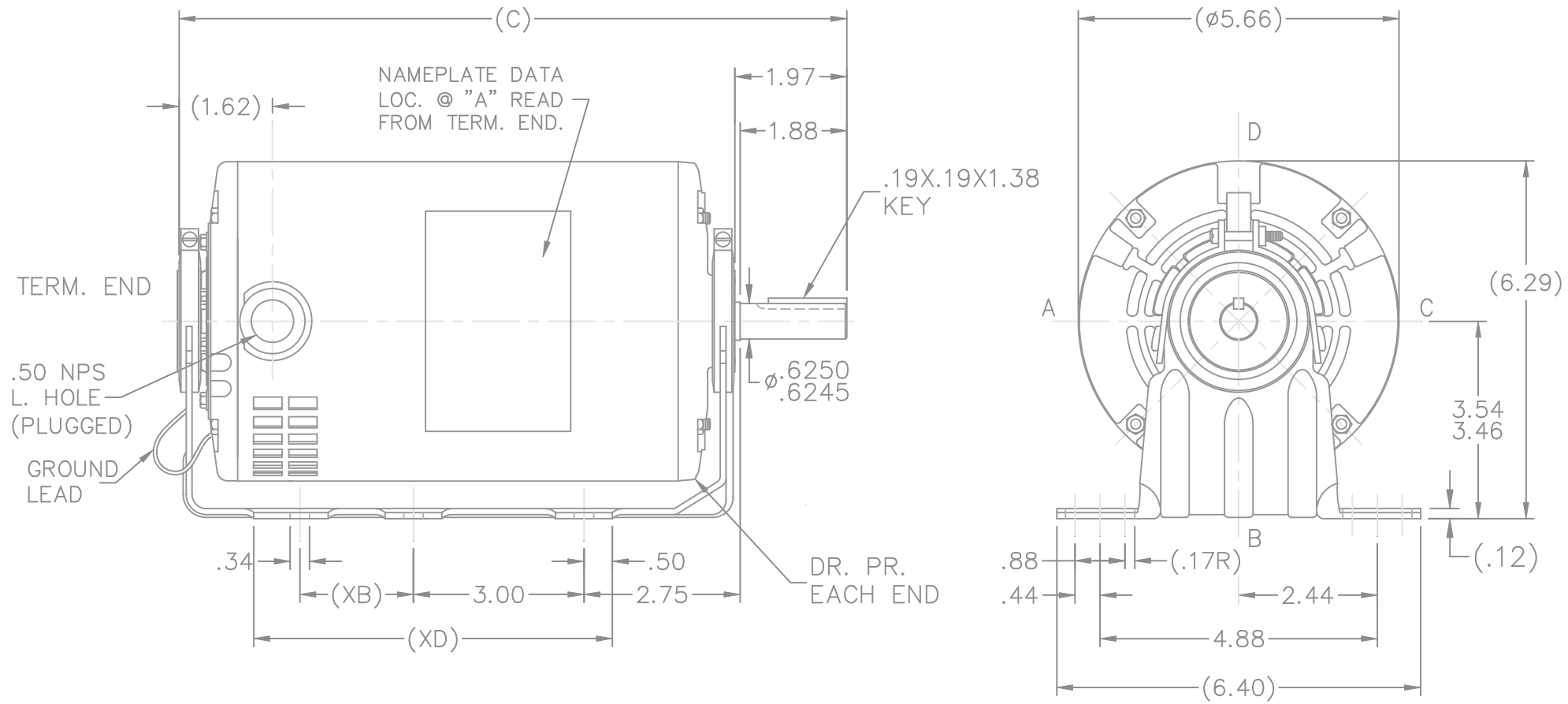

DASH	XB	XD	C	DASH	XB	XD	C
600	0	4.50	9.97	750	2.00	6.00	11.47
650	0	5.00	10.47				
700	0	5.50	10.97	800	2.00	6.50	11.97

NO.	REVISION	BY & DATE	CHK

TOLERANCES UNLESS SPECIFIED

DEC.	INCHES
.X	±.1
.XX	±.03
.XXX	±.005
.XXXX	±.0005
ANG	±7'30"

MARATHON ELECTRIC

TITLE OUTLINE

MAT'L.

FINISH

CAD FILE ss403611

RFP 06-12-2007

DIST WP

DRAWN	NB	06-12-2007
CHK	VL	06-12-2007
APPD	VL	06-12-2007
SCALE	3=8	
REF	SS75077	
FMF	CN41440	
PREV		

SIZE A | DRAWING NO. SS403611 | PAGE OF | REV.

THIS DRAWING IN DESIGN AND DETAIL IS OUR PROPERTY AND MUST NOT BE USED EXCEPT IN CONNECTION WITH OUR WORK ALL RIGHTS OF DESIGN AND INVENTION ARE RESERVED
THIS IS AN ELECTRONICALLY GENERATED DOCUMENT – DO NOT SCALE THIS PRINT

10/2/2008 5:36:16 AM

Uncontrolled Copy

EE7196

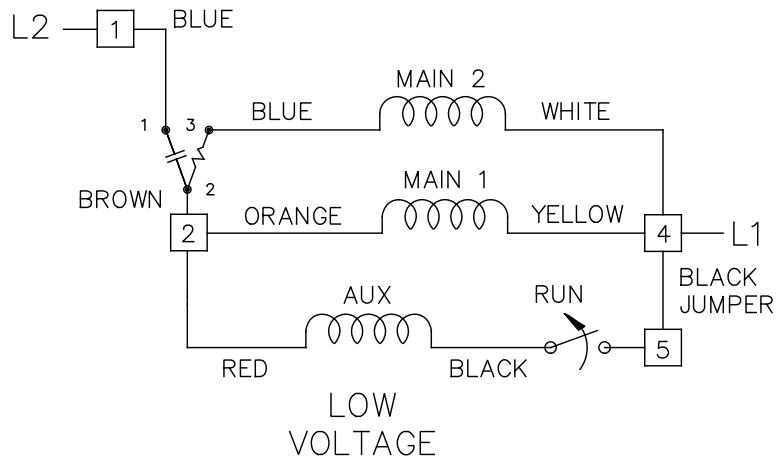

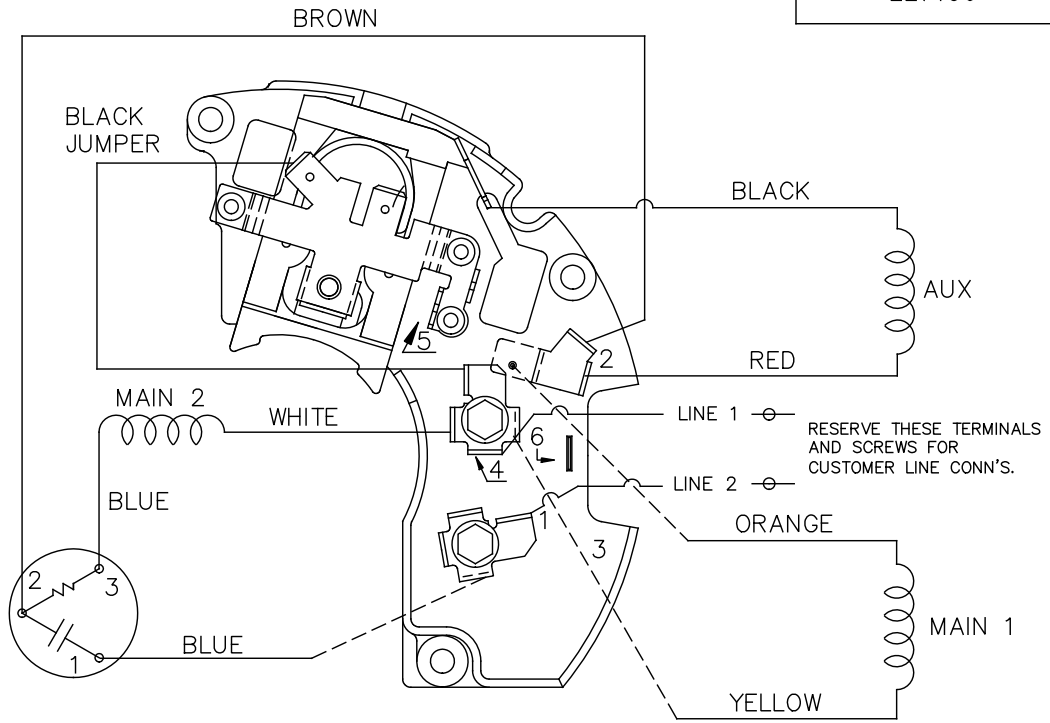

DUAL VOLTAGE – SPLIT PHASE
REVERSIBLE ON TERM BOARD
WITH OVERLOAD PROTECTION

VIEWING TERM END

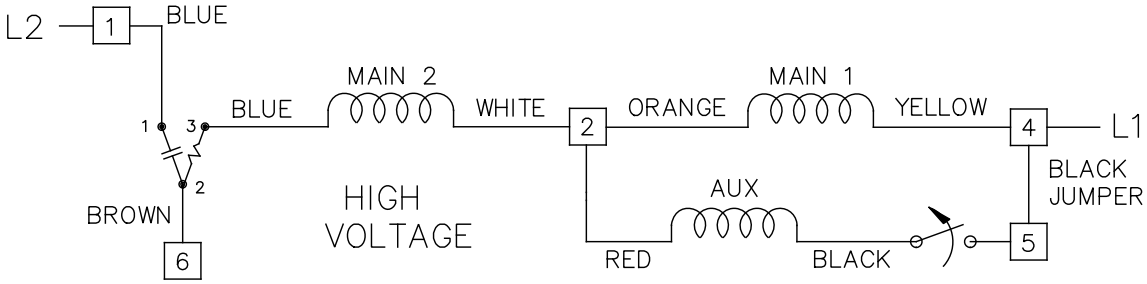

LOW VOLTAGE CCW ROTATION SHOWN.

FOR HIGH VOLTAGE
CONNECT BROWN TERM 2 TO TERM 6.
CONNECT WHITE TERM 4 TO TERM 2.

TO REVERSE ROTATION EITHER
VOLTAGE INTERCHANGE RED
LEAD WITH BLACK LEAD.

NO.	REVISION	BY & DATE	CHK
5	TEMPLETE CHANGED TO REGAL	MVG 03-06-2017	SM
4	REDRAWN IN AUTOCAD	TAT 08-02-2004	ML
3	REVISED LINE 2 LOCATION CN 6427	RM 01-28-1991	
2	ADDED CUSTOMER CONNECTION NOTE CN 6011	BW 08-03-1989	
1	NEW DRAWING	ML 08-19-1988	

TOLERANCES UNLESS SPECIFIED

DEC.	INCHES
.X	±.1
.XX	±.02
.XXX	±.005
.XXXX	±.0005
ANG	±7'30"

REGAL™ Regal Beloit America, Inc.

TITLE CONNECTION DIAGRAM
48 FR. – DUAL VOLTAGE REVERSIBLE

MAT'L.
FINISH

DRAWN ML 01-28-1988
CHK GK 01-05-1988
APPD DRN 03-15-1988
SCALE 1=1
REF
FMF
PREV

THIS DRAWING IN DESIGN AND DETAIL IS OUR PROPERTY AND MUST NOT BE USED EXCEPT IN CONNECTION WITH OUR WORK ALL RIGHTS OF DESIGN AND INVENTION ARE RESERVED
THIS IS AN ELECTRONICALLY GENERATED DOCUMENT – DO NOT SCALE THIS PRINT

RFP
DIST WP
CAD FILE ee7196
SIZE A
DRAWING NO. PAGE OF EE7196
REV. 5

Uncontrolled Copy

CERTIFICATION DATA SHEET

Model#:	56S17D2064 J	**WINDING#:**	SM55497 NONE 4
CONN. DIAGRAM:	A-EE7196	**ASSEMBLY:**	F1 ONLY
OUTLINE:	A-SS403611-650		

TYPICAL MOTOR PERFORMANCE DATA

HP	KW	SYNC. RPM	F.L. RPM	FRAME	ENCLOSURE	KVA CODE	DESIGN
1/2&1/3	.37&0.25	1800	1725&1425	56	DP	L	NO DESIGN CODE

PH	Hz	VOLTS	FL AMPS	START TYPE	DUTY	INSL	S.F	AMB°C	ELEVATION
1	60/50	115/230#110/220	7.2/3.6&7.4/3.7	ACROSS THE LINE	CONTINUOUS	B3	1.25/1.0	40	3300

FULL LOAD EFF: 66&59.5	3/4 LOAD EFF: 0	1/2 LOAD EFF: 0	GTD. EFF	ELEC. TYPE	NO LOAD AMPS
FULL LOAD PF: 71.5&52	3/4 LOAD PF: 0	1/2 LOAD PF: 0	0	SPLIT PHASE	3.8 / 1.9

F.L. TORQUE	LOCKED ROTOR AMPS	L.R. TORQUE	B.D. TORQUE	F.L. RISE°C
24.3 LB-FT	44.4 / 22.2	34.2 LB-FT -	49.2 LB-FT -	0

SOUND PRESSURE @ 3 FT.	SOUND POWER	ROTOR WK^2	MAX. WK^2	SAFE STALL TIME	STARTS /HOUR	APPROX. MOTOR WGT
- dBA	- dBA	0 LB-FT^2	- LB-FT^2	- SEC.	-	0 LBS.

*** SUPPLEMENTAL INFORMATION ***

DE BRACKET TYPE	ODE BRACKET TYPE	MOUNT TYPE	ORIENTATION	SEVERE DUTY	HAZARDOUS LOCATION	DRIP COVER	SCREENS	PAINT
STANDARD	STANDARD	RESILIENT BASE	HORIZONTAL	FALSE	NONE	FALSE	NONE	GRAY (POWDER)

BEARINGS		GREASE	SHAFT TYPE	SPECIAL DE	SPECIAL ODE	SHAFT MATERIAL	FRAME MATERIAL
DE	OPE						
BALL	BALL	POLYREX EM	STANDARD 56	NONE	NONE	1144 STRESSPROOF (C-223)	ROLLED STEEL
6203	6203						

THERMO-PROTECTORS				THERMISTORS	CONTROL	SPACE /n HEATERS
THERMOSTATS	PROTECTORS	WDG RTDs	BRG RTDs			
NONE	AUTOMATIC	NONE	NONE	NONE	FALSE	NONE VOLTS

If Inverter equals NONE, contact factory for further information

INVERTER TORQUE: NONE
INV. HP SPEED RANGE: NONE

ENCODER: NONE
NONE NONE
NONE NONE PPR

BRAKE: NONE NONE
NONE P/N NONE
NONE NONE
NONE FT-LB NONE V NONE Hz

*
N
O
T
E
S
*

DATE: 06/28/2017 02:19:52 AM
FORM 3531 REV.3 02/07/99

Uncontrolled Copy

** Subject to change without notice.